British Audio



OPTISOUND BMW 4 COAXIAL

- OPTISOUNDBMW4R-V2

OPTISOUND

BMW Replacement Speakers

Owners Manual

Congratulations on purchasing your VIBE speakers. Please read this manual in order to fully understand how to get the best results from this product and ensure that all advice on how to look after the product is followed.

Thank you for buying VIBE, we hope you enjoy listening to your product as much as we enjoyed creating it.

WARNING



DO NOT EXPOSE THIS PRODUCT TO DAMP OR MOISTURE - doing so may result in fire, shock or damage to the product.
BEFORE WIRING DISCONNECT THE CABLE FROM THE POSITIVE BATTERY TERMINAL - failure to do so may result in electric shock or injury.
ENSURE GOOD AND CORRECT CONNECTIONS - failure to make the correct connections may result in fire or damage to the product.
DO NOT USE ANY FUNCTIONS OF THIS EQUIPMENT THAT MAY TAKE YOUR CONCENTRATION AWAY FROM DRIVING YOUR VEHICLE - do not set up your amplifier whilst driving, doing so may result in an accident. For prolonged setting up, make sure that your vehicle is stationary and in a safe location.
KEEP THE VOLUME AT A LEVEL SO YOU CAN STILL HEAR OUTSIDE NOISE - failure to do this may result in an accident. VIBE equipment is capable of producing sound levels that can permanently damage your hearing. VIBE recommends caution when listening at high volume. For safe and enjoyable listening the sound should be comfortable and clear without distortion.

CAUTION
Never connect any speaker lead to the car chassis. This can cause severe damage to your speaker /car radio /amplifier.
Before drilling or cutting any holes, investigate the layout of your vehicle thoroughly. Use caution when working near the fuel / hydraulic lines and electrical wiring.
Observe the correct polarity when wiring, improper phasing may cause a loss of bass response.
Ensure that no moving parts catch on the speaker or grill (e.g. window or door handles, or window glass inside the door)

Limited Warranty

All VIBE products carry a full 12 month warranty, valid from the date of the original receipt and proof of purchase (UK only). The online warranty card should be completed within seven days of the original purchase date. The original receipt and packaging should be retained for this twelve month period. If the product develops a problem any stage during the warranty period, it should be returned to the point of purchase in it's original packaging, and complete with no items missing.

A full description of VIBE's warranty information can be found on our website:
www.vibeaudio.co.uk

What Is Not Covered

- Damage to product due to improper installation.
- Subsequent damage to other components.
- Damage caused by exposure to moisture, excessive heat, chemical cleaners and / or UV radiation.
- Damage through negligence, misuse, accident or abuse. Repeated returns for the same fault may be considered abuse.
- Any cost or expense related to the removal and / or re-installation of the product.
- Damage caused by amplifier clipping or distortion.
- Items repaired or modified by any unauthorised repair facility.
- Return shipping on non defective items.
- Products returned without a returns authorisation number.
- Damage to product due to use of sealant.

International Warranty

Contact your international VIBE dealer or distributor concerning specific procedure for your country's warranty policies. www.vibeaudio.co.uk

Warning

VIBE equipment is capable of sound pressure levels that can cause permanent damage to your hearing and those around you. Please use common sense when listening to your audio system and practice safe sound.

Copyright

All content included in this manual such as text, graphics, logos, icons, images and data, are the property of Midbass Distribution Limited t/a VIBE Technologies Limited (herein referred to as "VIBE", "us" or "we") and its affiliate or their content and technology providers, and are protected by United Kingdom and International copyright laws. All rights reserved. VIBE TV, VIBE Arcade, Bass Box, Optisound, Cinesound, BlackAir, BlackBox, Space, LiteAir, SLICK, BlackDeath, Bubonic, Reaper, Anti-VIBE, FastPlug, BlackHole, QB69, VIBE Turbo Port, Vibe TurboVent, Pressure Board, Super Driver, VIBE Pulse, VIBE Power, VIBE Digital, VIBE MAG Plugs, Ferrite Loaded, VIBE Solid Core, VIBE OCC, VIBE FLAT, ICC, Bass Enhance, Bass Enhance+, QBass, SpeedBass, PowerBass, N-Wedge, Box Grip, ARBSS, Supercar Series and all stylised representations of product names, or the abbreviations of product names, as logos are all trademarks of VIBE. Graphics and logos are trademarks or trade dress of VIBE Technologies Ltd or its subsidiaries. VIBE's trademarks and trade dress may not be used in connection with any product or service that is not VIBE's, in any manner that is likely to cause confusion among customers or in any manner that disparages or discredits VIBE. All other trademarks not owned by VIBE or its subsidiaries that appear in this manual are the property of their respective owners, who may or may not be affiliated with, connected to, or sponsored by VIBE or its subsidiaries.

TO THE FULLEST EXTENT PERMITTED AT LAW, VIBE IS PROVIDING THIS MANUAL AND ITS CONTENT ON AN "AS IS" BASIS AND MAKES NO (AND EXPRESSLY DISCLAIMS ALL) REPRESENTATIONS OR WARRANTIES OF ANY KIND, EXPRESS OR IMPLIED, WITH RESPECT TO THIS MANUAL OR THE INFORMATION, CONTENT, MATERIALS OR PRODUCTS INCLUDED IN THIS MANUAL INCLUDING, WITHOUT LIMITATION, WARRANTIES OF MERCHANTABILITY AND FITNESS FOR A PARTICULAR PURPOSE. IN ADDITION, VIBE DOES NOT REPRESENT OR WARRANT THAT THE INFORMATION CONTAINED IN THIS MANUAL IS COMPLETE OR CURRENT, AND THAT ALL SPECIFICATIONS AND INFORMATION CONTAINED WITHIN THIS MANUAL ARE SUBJECT TO CHANGE WITHOUT NOTICE. VIBE RECOMMEND CAUTION WHEN LISTENING TO MUSIC REPRODUCED THROUGH VIBE EQUIPMENT. VIBE EQUIPMENT IS CAPABLE OF PRODUCING SOUND AND SOUND PRESSURE LEVELS THAT CAN PERMANENTLY DAMAGE HEARING OF YOU AND THAT OF OTHERS. FOR SAFE AND ENJOYABLE LISTENING, THE SOUND SHOULD BE CLEAR WITHOUT DISTORTION AT A COMFORTABLE VOLUME. BY USING ANY VIBE EQUIPMENT, YOU AGREE TO TAKE FULL RESPONSIBILITY FOR YOUR OWN SAFETY AND THE SAFETY OF OTHERS WHEN LISTENING TO MUSIC AT HIGH VOLUMES THROUGH EQUIPMENT YOU HAVE PURCHASED. USE OF ANY VIBE EQUIPMENT CONSTITUTES AGREEMENT TO THIS DISCLAIMER. Except as specifically stated in this manual, to the fullest extent permitted at law, neither VIBE nor any of its affiliates, directors, employees or other representatives will be liable for damages arising out of or in connection with the use of this manual or the information, content, materials or products included. This is a comprehensive limitation of liability that applies to all damages of any kind, including (without limitation) compensatory, direct, indirect or consequential damages, loss of data, income or profit, loss of or damage to property and claims of third parties. For the avoidance of doubt, VIBE does not limit its liability for death or personal injury to the extent only that it arises as a result of negligence of VIBE, its affiliates, directors, employees or other representatives.

Speaker Installation

The OPTISOUNDBMW4R-V2 coaxial is a direct replacement for the factory fitted midrange driver, To Install, locate into the three mounting points after removing the factory midrange.

NOTE:
It will be be necessary to remove the front / rear door panels in order to remove the factory midrange and install the OPTISOUNDBMW4R-V2 coaxial speaker.

If you are unsure of how to safely remove the door panels without causing damage VIBE advise contacting an authorised installer, details can be found on our website www.vibeaudio.co.uk

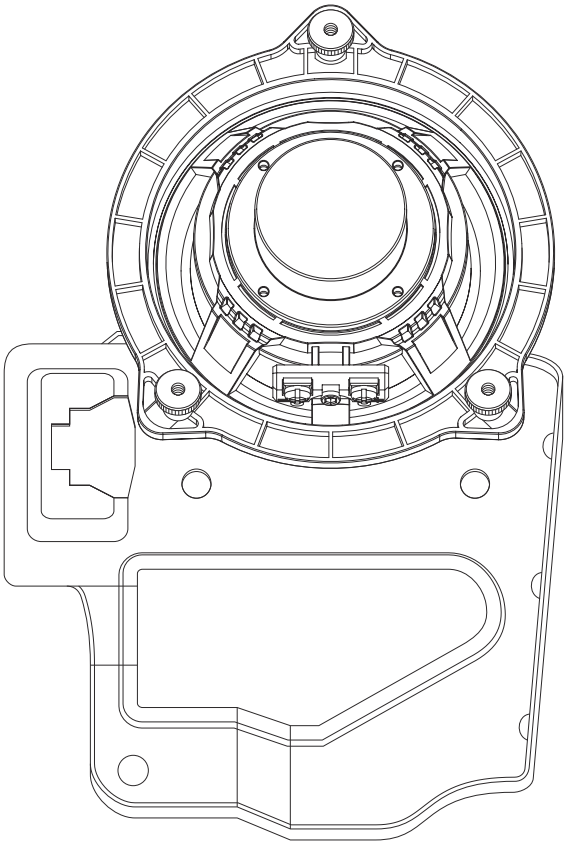

The OPTISOUNDBMW4R-V2 has been designed for easy plug and play installation in mind.

The OPTISOUNDBMW4R-V2 has screw terminal connections to allow maximum flexibility with both OEM and aftermarket audio systems.

If the OPTISOUNDBMW4R-V2 is to be powered directly from the OEM headunit it will be necessary to use the included adaptor cable to connect the OPTISOUNDBMW4R-V2 to the factory speaker connector that the original midrange was connected to.

OEM connection

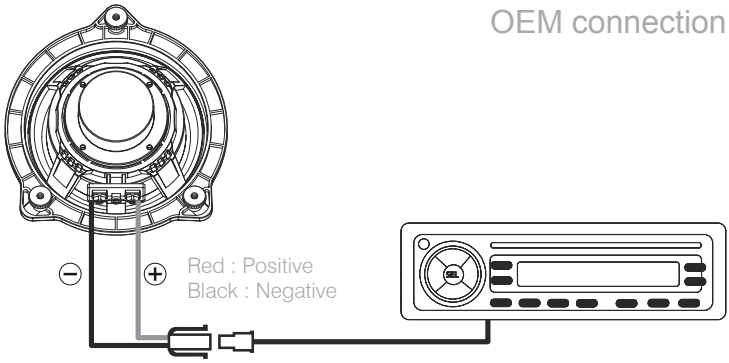

Aftermarket connection

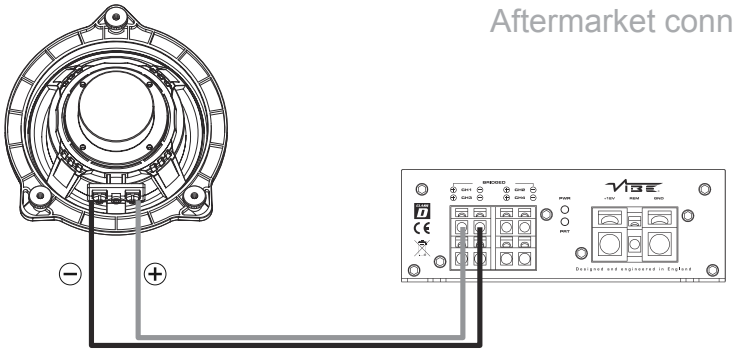

Specification

Model	OPTISOUNDBMW4R-V2
Type	Coaxial
Configuration	2-way
Speaker Size	4" (100mm)
Peak/RMS Power	180W/60W
Sensitivity	89dB
Frequency Response	90Hz - 25kHz
Impedance	4Ω
Vehicle Manufacturer	BMW
Grille Included	No
Recommended Amp	POWERBOX65.4M-V7

Vehicle Application

Series	Type	Model	Year	Fitment
1-Series	E813	3-Door	2004 - 2011	Front door
	E82C	Coupe	2004 - 2011	Front door
	E875	5-Door	2004 - 2011	Front door
	E88C	Convertible	2004 - 2011	Front door / rear side panel
3-Series	E90S	Sedan	2005 - 2011	Front door
	E91T	Touring	2005 - 2011	Front door / rear door
	E92C	Coupe	2005 - 2011	Front door / rear side panel
	E93C	Convertible	2005 - 2011	Front door / rear side panel
5-Series	F10	Sedan	From 2011	Front door / rear door
	F11T	Touring	From 2011	Front door / rear door
6-Series	E63C	Coupe	2003 - 2010	Front door / rear side panel
	E64C	Convertible	2003 - 2010	Front door / rear side panel
	F12	Convertible	2011 - 2018	Rear side panel
	F13	Convertible	2011 - 2018	Rear side panel

UK Technical Enquiries

Call 09067031420

Calls cost 50p per minute. Call costs correct at date of publication (01/02/12)
Hours of business 9.00am - 5.30pm GMT Monday - Friday.
All calls are recorded for training purposes.
MIDBASS Distribution
PO Box 11000
B75 7WG



International Technical Enquiries

For international technical support please contact the distribution agent for your country.
Please visit **www.vibeaudio.co.uk** for more details.



British Audio

OPTISOUND

SERIES

Designed and engineered in England

www.vibeaudio.co.uk

www.youtube.com/vibeaudio

www.facebook.com/vibeaudio

www.twitter.com/vibecaraudio